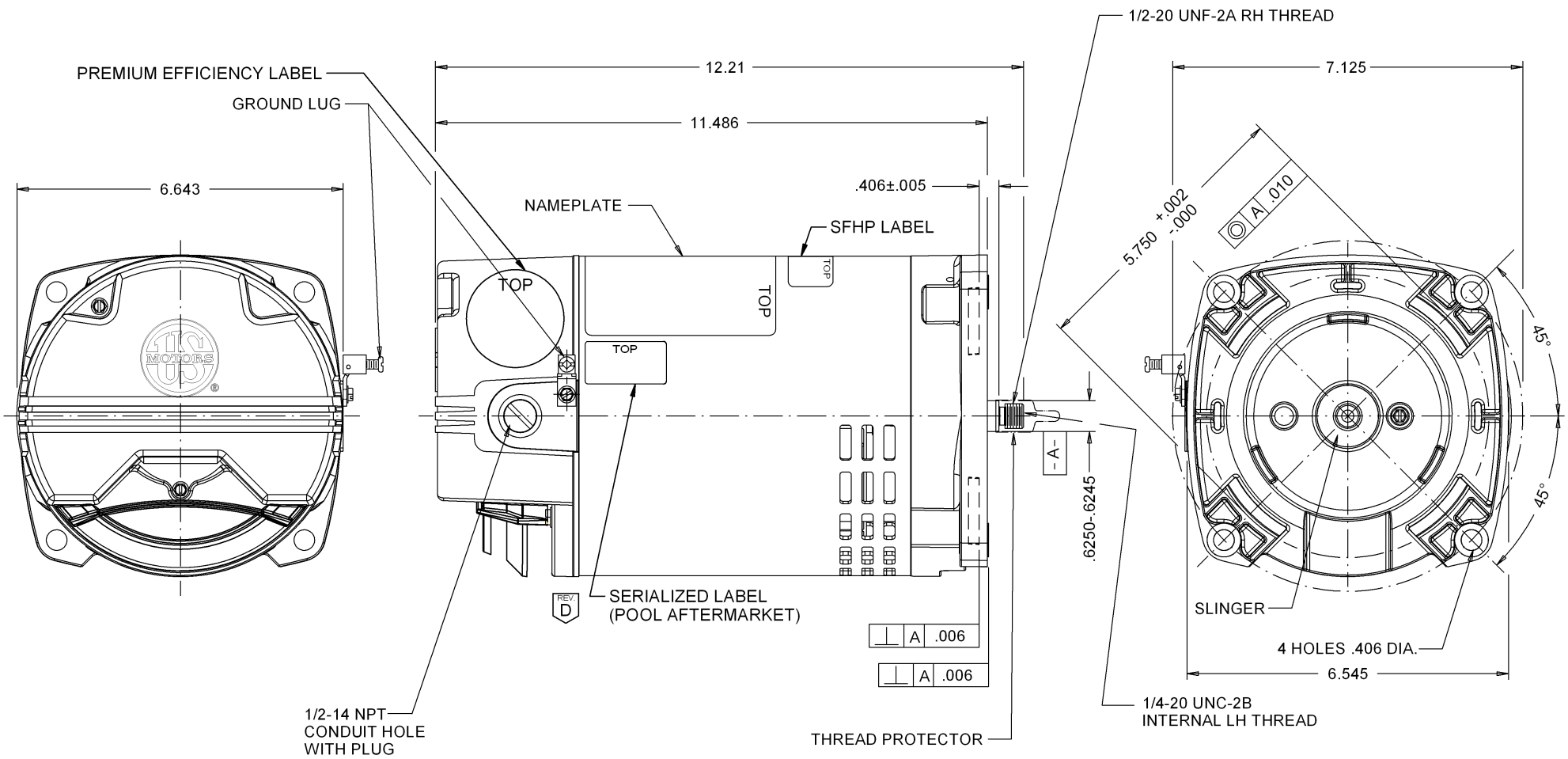

S.F.	S.F. AMPS
1.90	4.4-4.2/8.4

MODEL	REF	CUSTOMER	HP	VOLTS	AMPS	HZ	RPM	ROTATION	CUSTOMER PN
K63CXESB-4789		POOL AFTERMARKET	1/2	208-230/115		60	3450	CW LEAD END	EB845

SHEET NUMBER	REV	REVISION RECORD FOR: C7458-08
1 OF 1	D	ADDED SERIALIZED LABEL.
REVISION DATE		
22-APR-13		

INFORMATION DISCLOSED ON THIS DOCUMENT IS CONSIDERED PROPRIETARY AND SHALL NOT BE REPRODUCED OR DISCLOSED WITHOUT WRITTEN CONSENT OF NIDEC MOTOR CORPORATION

NIDEC MOTOR CORPORATION

ALL DIMENSIONS ARE FOR REFERENCE ONLY UNLESS TOLERANCE IS GIVEN

ISSUED BY	REVIEWED BY	ENGINEER APPROVED
B. ANDRADE	J. SCHRADER	J. SCHRADER

TITLE	CODE	ITEM NO.	SIZE
ASSEMBLED VIEW	V01	739176	B

NIDEC MOTOR CORPORATION 22-Abr-13