ROBOTIC POOL CLEANER
ROBOT DE PISCINE SANS FIL

Aiper Scuba SE

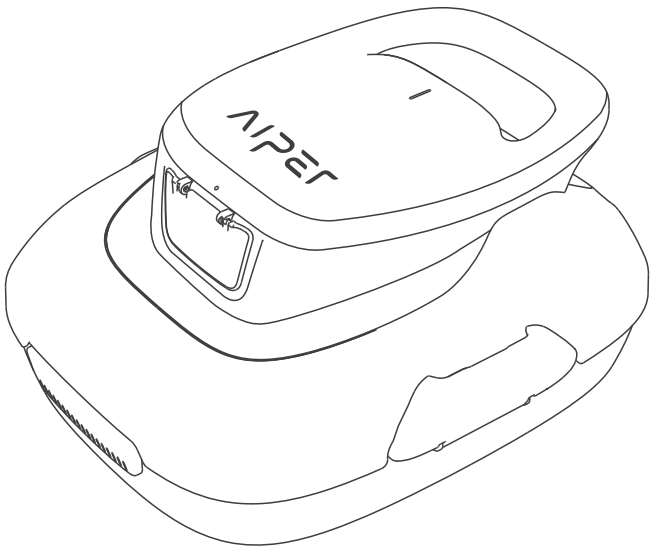

User Manual / Manuel d'utilisation

CONTENTS / SOMMAIRE / CONTENIDOS

English / Anglais / Inglés ---------- 1-18
French / Français / Francés ---------- 19-36
Spanish / Espagnol / Español ---------- 37-54

FCC Statement

This device complies with Part 15 of the FCC Rules. Operation is subject to the following two conditions: (1) This device may not cause harmful interference, and (2) this device must accept any interference received, including interference that may cause undesired operation.

Warning: Changes or modifications not expressly approved by the party responsible for compliance could void the user's authority to operate the equipment.

Note: This equipment has been tested and found to comply with the limits for a Class B digital device, pursuant to Part 15 of the FCC Rules. These limits are designed to provide reasonable protection against harmful interference in a residential installation.

This equipment generates, uses, and can radiate radio frequency energy and, if not installed and used in accordance with the instructions, may cause harmful interference to radio communications. However, there is no guarantee that interference will not occur in a particular installation. If this equipment does cause harmful interference to radio or television reception, which can be determined by turning the equipment off and on, the user is encouraged to try to correct the interference by one or more of the following measures:

(1) Reorient or relocate the receiving antenna.

(2) Increase the separation between the equipment and receiver.

(3) Connect the equipment into an outlet on a circuit different from that to which the receiver is connected.

(4) Consult the dealer or an experienced radio / TV technician for help.

Importer: Aiper Intelligent, LLC.

Address: 8735 Dunwoody Place, STE 6, Atlanta, Georgia 30350, USA. (Not for Returns)

US Toll-Free: +18668500666

AU Toll-Free: +611800497023

ISED Statements

This device complies with Innovation, Science and Economic Development Canada license-ICES-003. Operation is subject to the following two conditions: (1) This device may not cause interference, and (2) This device must accept any interference, including interference that may cause undesired operation of the device.

CAN ICES-003 (B)/NMB-003(B)

EN

Thank you for choosing Aiper.

You've now joined a family of millions who have already put their trust in Aiper to take care of their pools and are enjoying the convenience of a pristinely clean pool.

This user manual will help you maintain your device and ensure it performs at its maximum efficiency for years to come. Please take a few moments to read through.

If you have any questions, please visit our website at www.aiper.com and contact our customer service team for assistance or more information.

Aiper Customer Service:

US Toll-Free: +18668500666
AU Toll-Free: +611800497023
Email: service@aiper.com
Facebook: @AiperOfficial

Scan for Video Guide

Scan the QR Code to Access Customer Support

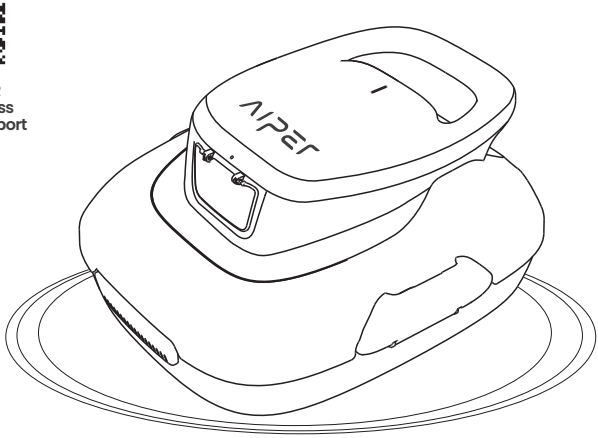

IMPORTANT SAFETY PRECAUTIONS

Read this manual carefully and use your device in accordance with the instructions. Aiper is not liable for any damages or injuries caused by improper use.

Instructions:

1. READ AND FOLLOW ALL INSTRUCTIONS.
2. Do not operate the device when people or animals are in the pool.
3. Ensure the device is turned off when conducting maintenance, cleaning, or when not in use.
4. Do not allow children to ride the device or operate it without adult supervision.
5. Only use the original, authorized power adapter.
6. The adapter cord should only be replaced by a qualified electrician.
7. It is strongly recommended to connect the charger to a surge protector when charging.
8. Ensure the charging port is completely dry before charging your device.
9. While charging, the device should be kept in a cool, well-ventilated place. Customers should not cover the device while charging as this may lead to overheating or hardware malfunctions.
10. Do not operate the device out of the water, as this may lead to hardware malfunctions or overheating.
11. Only certified professionals should disassemble the driving kit of the device.
12. Do not operate the device while running your pool filter.

13. Avoid puncturing the oil sealing of the motor, as this contains grease. If punctured, this may cause a small grease leakage into your pool.
14. Do not store or use the device near anything that generates extreme heat.
15. Do not pierce or bludgeon the device's shell, as this will cause irreparable damage. Additionally, the device should not be thrown.
16. WARNING – To reduce the risk of injury, do not permit children to use this product unless they are closely supervised at all times.
17. Ensure that children do not attempt to access cleaner while it is operating.
18. CAUTION

a. FOR OUTDOOR USE.

b. DO NOT RUN PUMP DRY.

c. FOR USE ONLY WITH CLASS 2 ADAPTOR, MODEL: GQ12-126100-HU.

d. FOR USE WITH SWIMMING POOLS ONLY.

e. TO REDUCE THE RISK OR INJURY, USER MUST READ MANUAL.

f. ENCLOSURE TYPE 3.

SAVE THESE INSTRUCTIONS

Please read this user manual carefully before using it.

1. Structure

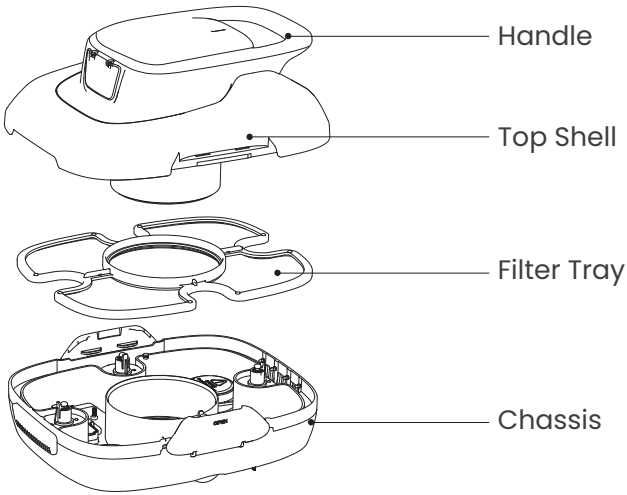

Retrieval Hook

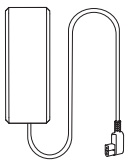
Charger

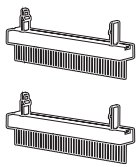
Brushes

2. Specifications & Working Conditions

1. Pool Size: 860 sq. ft./80m² Flat Floor Pools
2. Charger Input: 100-240V~, 50/60Hz, 1.0A
3. Charger Output: 12.6V⎓1.0A
4. Charging Time: 3-4 Hours
5. Battery Life: 90 Minutes
6. IP Grade: IPX8 Waterproof
7. Max Water Depth: 1.6-10ft (0.5-3m)
8. Battery Capacity: 2600mAh (28.08Wh)
9. Battery Voltage: 14.4V⎓

CAUTION:

For optimal performance, Aiper recommends using your device in the following water conditions.

- Temperature: 50-95°F (10-35°C)
- pH Value: 7.0-7.4
- Chlorine: Maximum 4 ppm
- NaCl: Maximum 5000 ppm

3. Using Your Aiper Pool Cleaner

3.1 First Use

a. The device was designed to clean flat floored swimming pools with no slopes up to 860 sq. ft./80m².

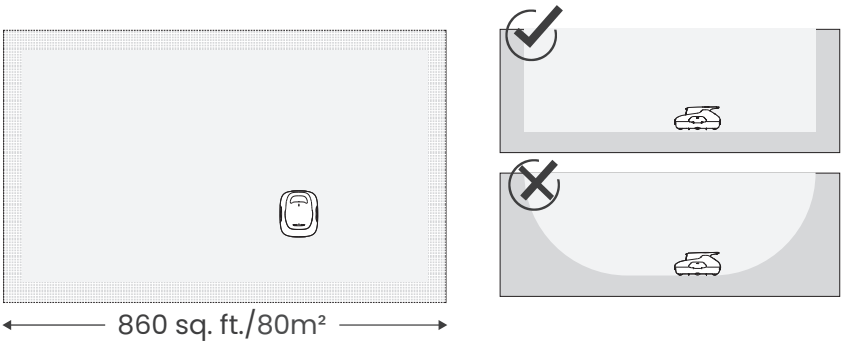

b. Tightly insert the two included brushes into the slots at the bottom of your device. You will hear a clicking sound that indicates the brushes are securely in place.

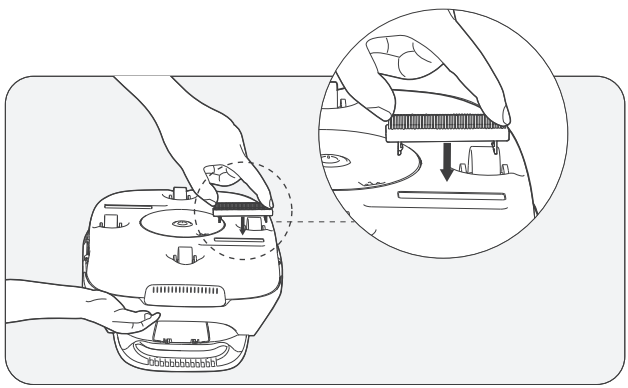

c. Power off your device after use.

d. Lift it from the pool with the bottom of the device facing the wall.

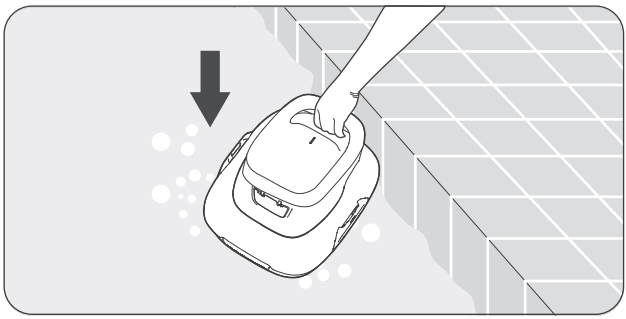

4. Optional

4.1 Fully charge your device before using it for the first time.

4.2 Press the Power Button and place your device in the water after you hear a beep.

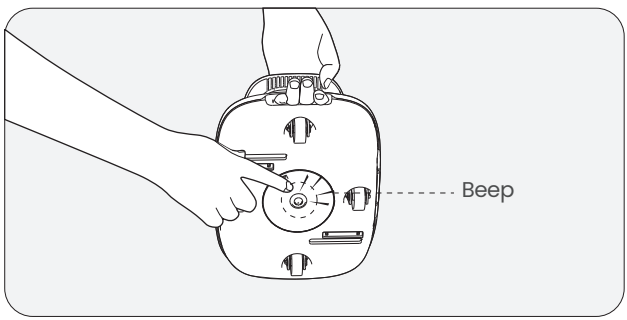

4.3 If your device has powered off due to low battery against the edge of your pool, the device will beep intermittently for two minutes.

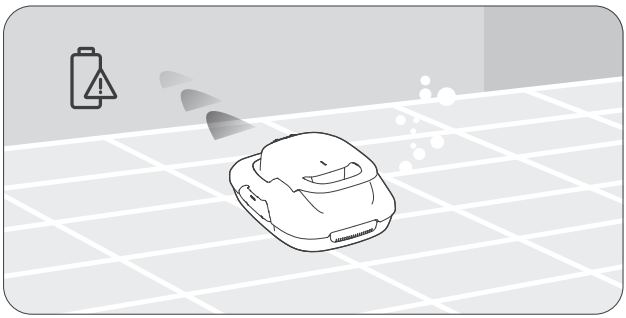

4.4 Lift your device from the pool using the included hook. Telescopic pole not included.

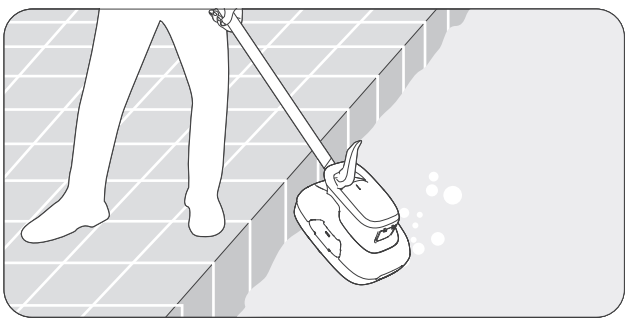

4.5 Open Latches: Open the left and right latches outwards.

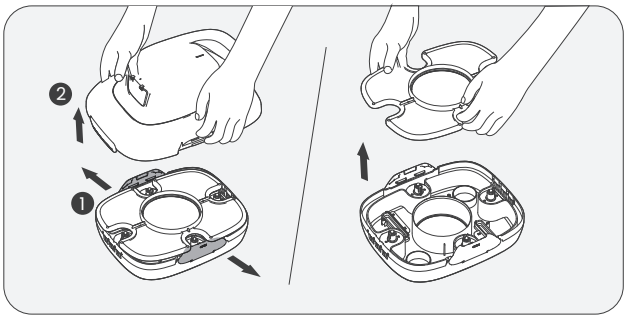

4.6 Open the Top Shell: Hold the handle with one hand and remove the Top Shell from your device with your free hand.

4.7 Remove the Filter Screen. Clean the filter and bottom of your device with clean water.

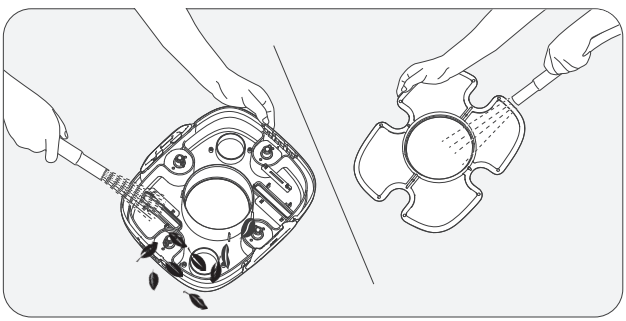

4.8 Put the filter back into your device. Return the Top Shell to the device. You will hear a click when Top Shell is securely attached to your device.

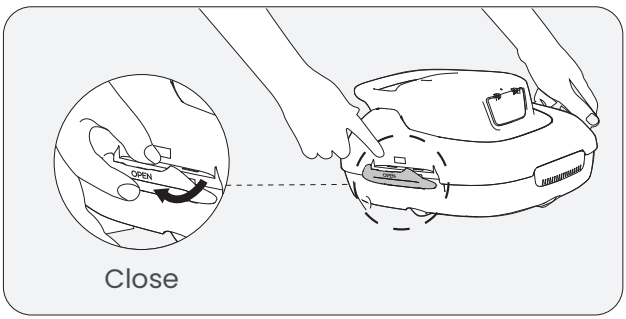

5. Charging

5.1 Fully charge your device before using it to clean your pool.

- Power off your device before charging.
- Clean and dry the charging port before plugging your device into an electrical outlet.

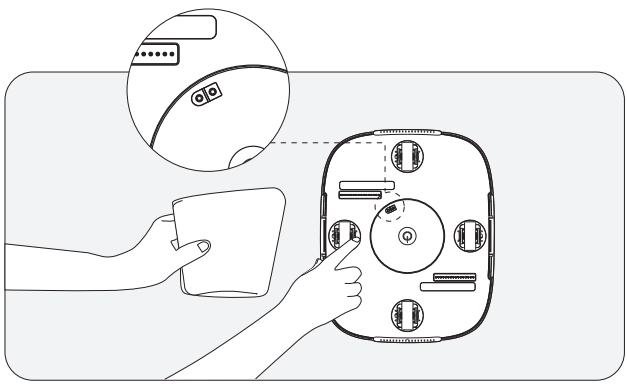

5.2 When charging, ensure your device is right side up to prevent damaging the handle.

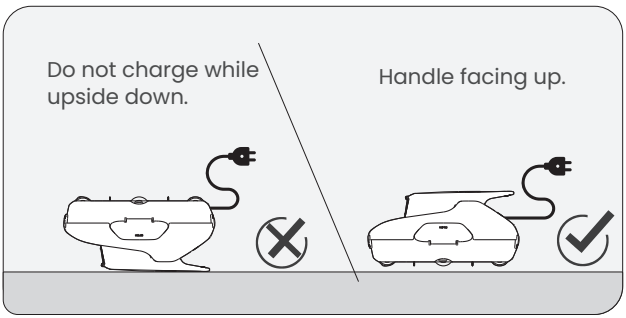

5.3 When the device is charged with the charger, the following statuses will be shown:

Working Status		Description
Red	Charging	The red light indicates charging in progress.
Green	Fully charged	The indicator light will turn green once the device is fully charged.

6. Maintenance

a. Always wash the filter tray immediately after use. Dried debris may cause blockage and affect performance if debris is not washed and removed in a timely manner.

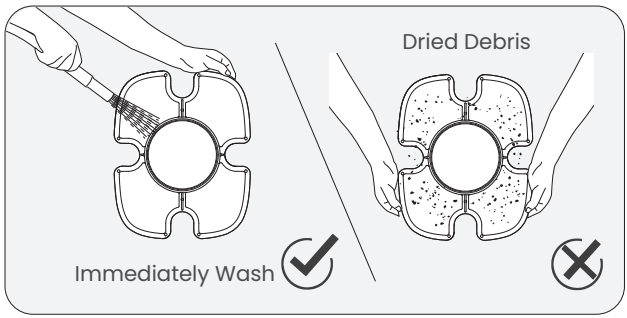

b. Brush Replacement
If a brush becomes worn out, follow the steps below.

1. Remove the Top Shell of your device and locate the brush position.
2. Using a small tool or your fingers, push the two small locking pins to the side as indicated in the diagram below.

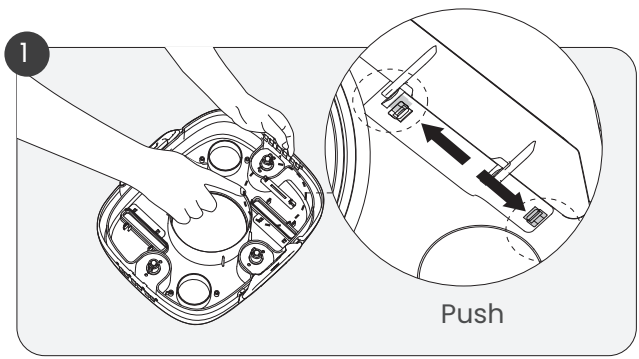

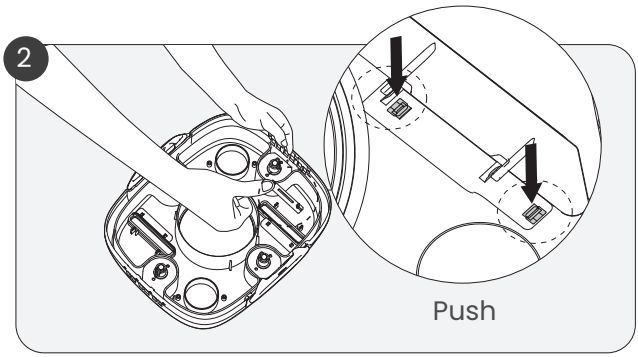

3. Press the locking pins down to release the brush.
4. Insert a new brush into the bottom slot of the cleaner.
   (Replacement brushes are not included)

c. Wheel Replacement
   If one of your device's wheels breaks, follow the steps below.

1. Remove the shell of your Aiper Scuba SE and find the location of the broken wheel.
2. Using a tool or your fingers, push the wheel buckle until it bends slightly, then press on the wheel stem as indicated in the diagram below.

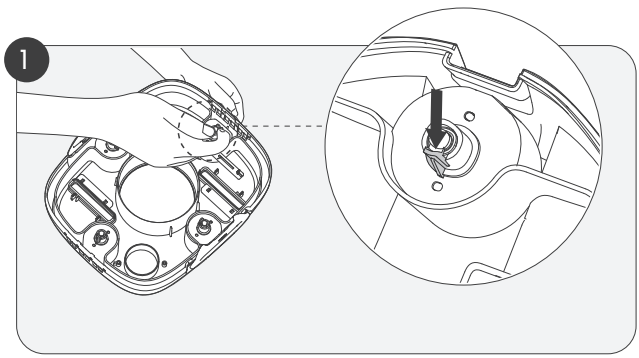

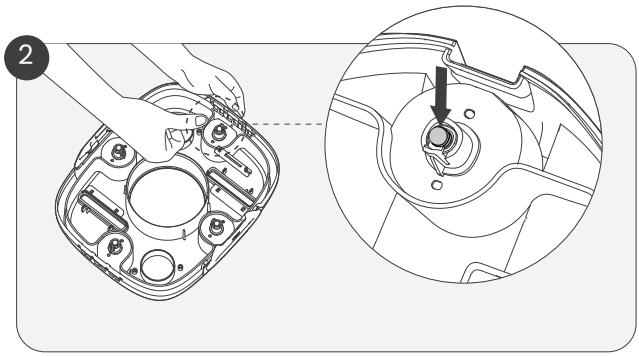

3. Insert the new wheel stem by first aligning it with the two small holes of the wheel socket. You should hear a clicking sound when the wheel is locked in place.

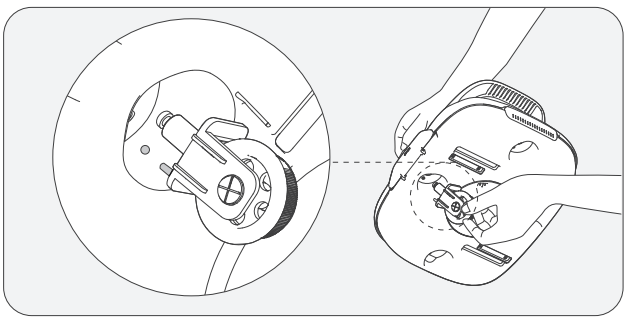

7. Storage

a. The device should be stored in a cool, well-ventilated place away from direct sunlight.

b. If you need to store the device for a prolonged period, we recommend you charge it every three months between 40%-60% to maintain battery health. Only use an authorized power adapter. If your device is not charged for a long time, battery discharge and battery voltage may act in unintended ways which could cause fatal damage.

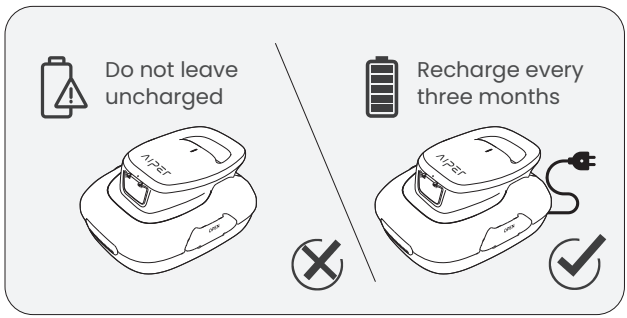

8. Common Faults

Working Status	Status Description	
Low Battery Alert	The device docks by the pool edge, with the buzzer beeping intermittently.	Beeps for 5 mins (beep for 2s intermittently)
Stuck Impeller Alert	The buzzer beeps intermittently.	Beeps for 5 min (beep for 1s intermittently)
Water Damage Alert	The buzzer beeps intermittently.	Beeps for 5 min (beep for 5s intermittently)

9. Packing List

NO.	Name	Model	QTY(pc)
1	Cleaner	Aiper Scuba SE	1
2	Charger		1
3	Retrieval Hook		1
4	User Manual		1
5	Brushes		2

10. Conventional Warranty

This product has passed quality control and safety test conducted by our technicians.

1. This product comes with a 12-month warranty that covers your item's battery and motor from the date of purchase.
2. This warranty is voided if the product has been altered, misused, or has been repaired by unauthorized persons.
3. This warranty extends only to manufacturing defects and does not cover damage resulting from the mishandling of the product by the owner.
4. The order number or record of purchase must be presented at the request of any repair claim during the warranty period.

This symbol indicates that this product shall not be treated as household waste. Instead it shall be handed over to the applicable collection point for the recycling of electrical and electronic equipment.