CAZO FIRE & WATER BOWL- WOOD GRAIN

THE OUTDOOR PLUS
USA MANUFACTURER OF FIRE & WATER FEATURES

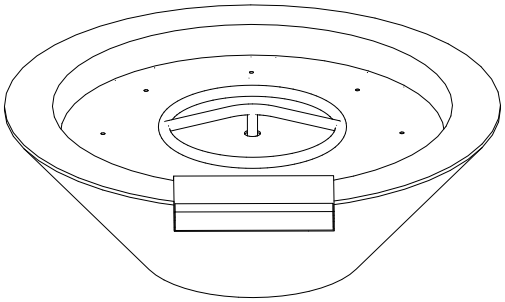

ISOMETRIC VIEW

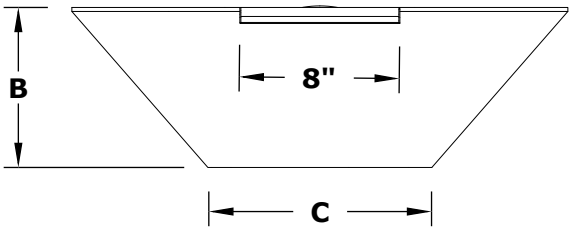

FRONT SIDE VIEW

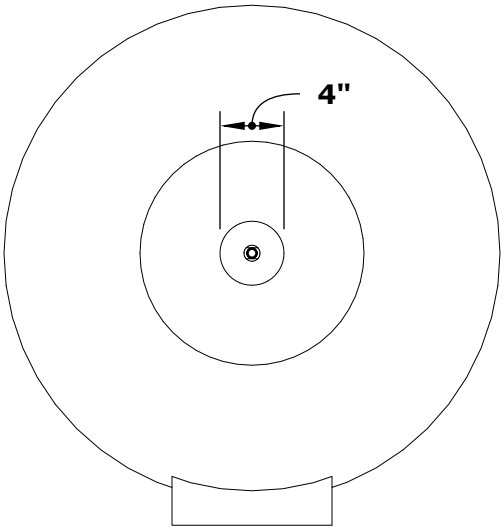

RIGHT SIDE VIEW

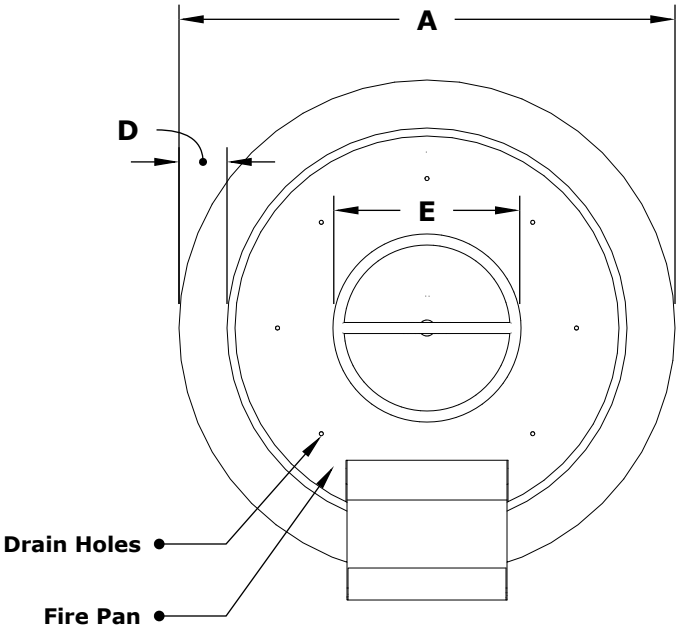

TOP VIEW

SKU	A	B	C	D	E	BTU
OPT-24RWGFW	24"	8"	12"	2"	8"	45,000
OPT-24RWGFWE12V	24"	8"	12"	2"	8"	45,000
OPT-32RWGFW	32"	10"	12"	2"	8"	45,000
OPT-32RWGFWE12V	32"	10"	12"	2"	8"	45,000

Fire Pit Material: GFRC Wood Grain
Pan Material: 304 Stainless Steel
Burner Material: 304 Stainless Steel

Standard 2" Depth on all pans
12V ELECTRONIC IGNITION
ANSI Z21.97-(2017) / CSA 2.41-(2017)

C US

Match Lit Unit Includes: Pan, Burner, Gas Orifice, Gas Hoses, Key Valve, Key,
12v Ignition Unit Includes: Pan, Burner, Gas Orifice, Gas Hoses, Key Valve, Key, Plug & Play Electronic Valve, Pilot Igniter.

Proprietary & Confidential: The information contained in this drawing is the sole property of ***The Outdoor Plus***. Any reproduction or as a whole without written permission of ***The Outdoor Plus*** is prohibited.

THEOUTDOORPLUS.COM | SALES@THEOUTDOORPLUS.COM | Main Phone: (909) 460-5579 | Fax: (909) 460-5530 | 235 E Main St. Ontario, California 91761, U.S.A